instrumentación
para fluidos

Level Indicator

Series

LP-80 / LP-81

Users Manual

The following users manuals are included:

- ☐ AMM Limit Switch Users Manual
- ☐ AMD Limit Switch Users Manual
- ☐ TKEX Transmitter Users Manual
- ☐ TEH, TTEH Transmitter Users Manual
- ☐ THX, TTHX Transmitter Users Manual
- ☐ TP-1200 Pneumatic Transmitter Users Manual.

Technical data

- Accuracy: ± 1,5% of the measured value.
- Scale: % (height and Volume on request)
- Mounting: Vertically on the top of the tank. (Side mounting with an auxiliary tank).
- Connections: DN-40 Flanges PN-40 DIN 2501 . G 2" (BSP) screwed connections. (Others available on request).
- Working pressure: PN-40 (up to PN-400 on request).
- Liquid temperature:
  Standard: -60ºC...+150ºC.
  On request: -120ºC...+400ºC.
- Ambient temperature: -10ºC...+80ºC.
- Length: From 300 to 6000 mm.

- Conforms with the Pressure Equipment Directive 97/23/CE. CE

⚠ This equipment is considered as being a pressure accessory and **NOT** a safety accessory as defined in the 97/23/CE directive, Article 1, paragraph 2.1.3.

- Optional Limit switches:

  - LP-AMM
    Micro-switch mounted inside meter indicator housing.
    • Maximum current: 3A.
    • Maximum Voltage: 250 Vac.

  Conforms with Directive 73/23/CEE (Low Voltage) CE

  - LP-AMD
    Slot type inductive limit switch according to norm DIN 19234 (NAMUR), mounted inside the meter indicator housing.
    • Nominal Voltage: 8,2 Vdc

  Conforms with Directive 89/336/CEE (EMC) CE

- Optional transmitters:

  - TKEX Angular position converter, coupled to the indicating system of the flow meter, which gives a linear output 0...4-20 mA proportional to the measured level.
    • Power supply: 12,7...36 Vdc.
    • Output signal: 0...4-20 mA.
    • Electrical connection: 2, 3 ó 4 wire.

  Certified by PTB to EEx ia IIC T6. CE

  - TEH A position transducer with analog output for 2 or 4 wire connection.
    • Power supply: 10 to 50 Vdc (2 wire) 220 Vac, 240 Vac, 110 Vac, 24 Vac 50/60 Hz (4 wire)
    • Output signal: 4-20 mA.

  Conforms with Directives 73/23/CEE (Low voltage) and 89/336/CEE (EMC) CE

  - THX A position transducer with analog output for 2 wire connection.
    • Power supply: 10 to 24 Vdc
    • Output signal: 4-20 mA.

  Conforms with Directives 89/336/CEE (EMC) and 94/9/CE (ATEX)

  Certified by LOM to EEx ia IIC T4 CE

  - TP1200
    Pneumatic transmitter that gives an output of 3-15 psi or 0,2-1 bar proportional to the measured level.
    • Air supply: 1,4 bar ±0,1 bar

WORKING PRINCIPLE

It is based on ARCHIMEDES PRINCIPLE .

The system consists of a float suspended on a spring.

When the liquid level rises it exercises an upwards force on the float proportional to the submerged volume. This force displaces the float upwards relaxing the spring. This displacement is shown by the indicating needle.

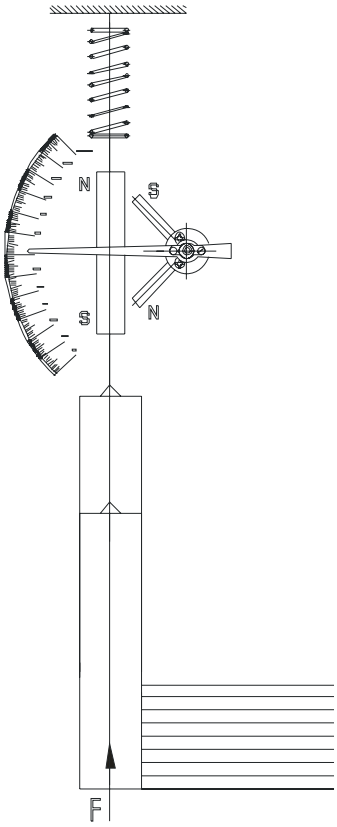

RECEPTION

The LP-80 level indicators are supplied already calibrated in our factory, ready to be mounted and put into operation.

The meters are supplied packed for their protection during haulage and storage

It is recommended to check that the measuring system is mechanically correct by means of the following verification:

The indicating needle is initially at 100% of the scale at the top. Pull slowly on the hook under the coupling piece to the tank.
A progressive and even resistance will be noted until the end stop is reached. When pulling on the hook the indicating needle will move towards the beginning of the scale. When the end stop is reached the indicating needle should coincide with the zero of the scale.
Check that the float length coincides with the level difference to be measured.

1. DIMENSIONS

LP-80

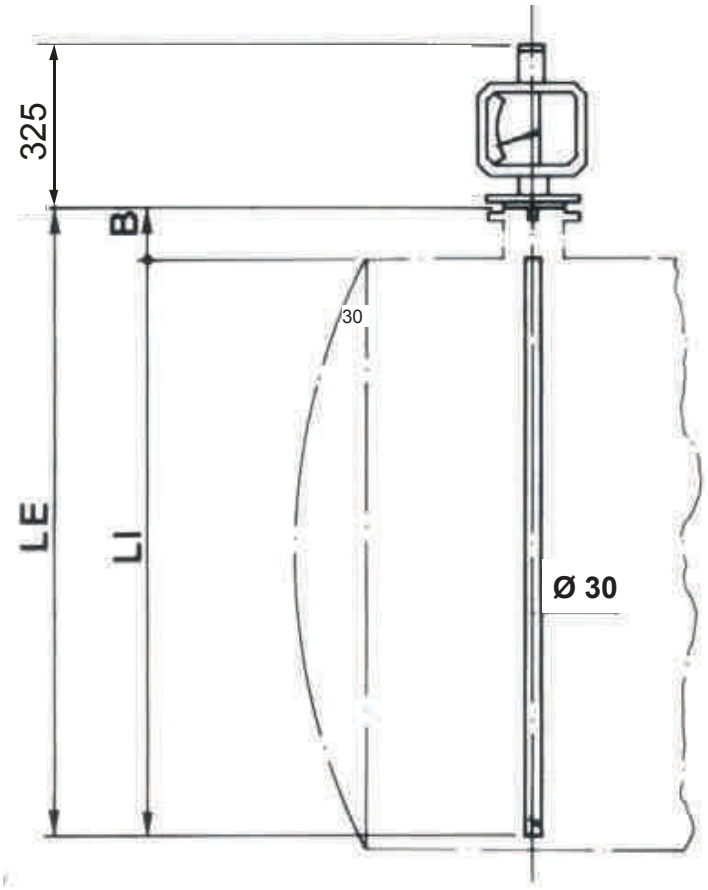

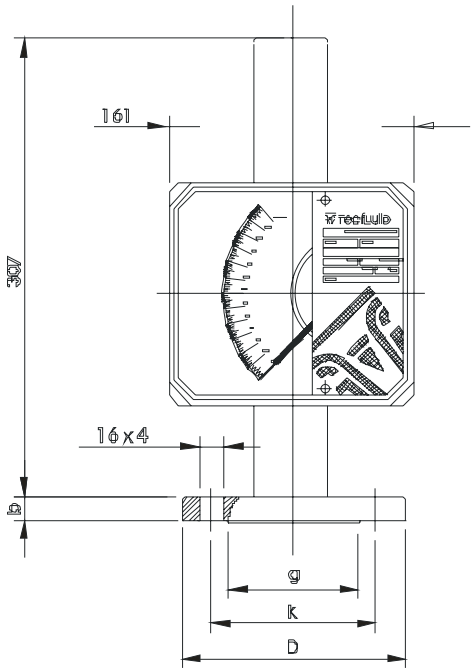

LP-80ME

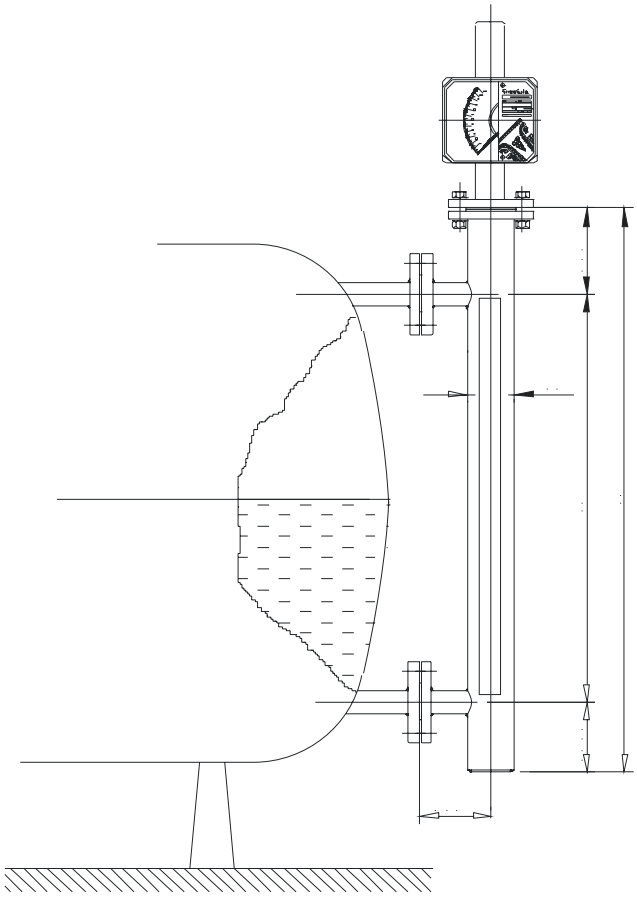

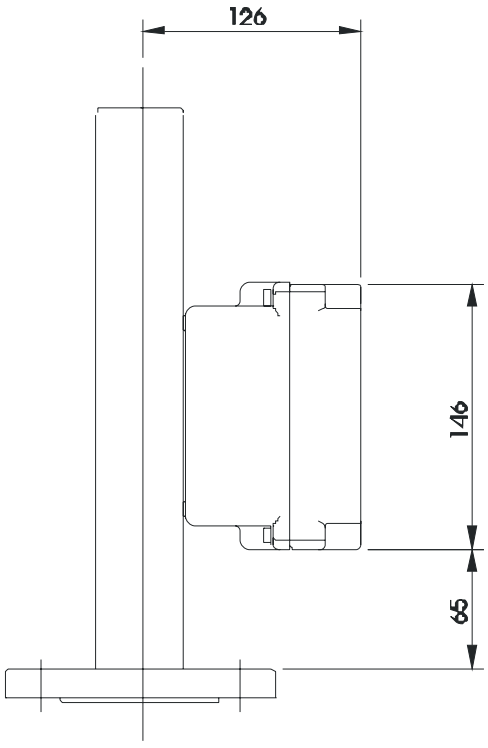

LP-81

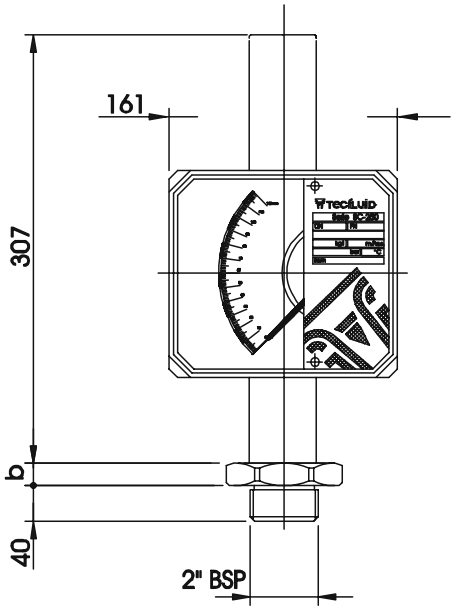

LP-80, LP-81, LP-80ME

DN	PN	d	k	g	lxnº	b	B	EB	LE	LI
40	40	150	110	88	18 x 4	18	According to clients specifications			

FLOAT

In lengths greater than 3 m (or in agreement with the client) the float is divided into 2 or more parts.

Before starting mounting, study the installation conditions to decide if it is better to assemble the float before, during or after introducing it into the tank. This will depend on the length of the float, availability of manholes etc.

The different parts of the float are assembled by means of a stud on the top of the lower piece and a female thread on the upper piece. A split washer (Grower) should be used on all the joints.

The top of the float has a length of chain. The last link of the chain should be hung on the hook which protrudes from the coupling piece to the tank.

Once the float is mounted, its weight will make the indicating needle descend to the zero of the scale. If we lift the float gently the indicating needle will move towards the full scale.

3. INSTALLATION

Mount the seal on the flange or the coupling thread.

Introduce with care the float through the mounting hole until the flange or coupling thread couples with the tank.

In the case of a flange, fix it with the appropriate nuts & bolts.

In the case of a screw fitting, turn until tight. **Do not apply torques greater than 350 Nm**.

If it has been decided to fit the float last, it must be introduced via a manhole and mounted from inside of the tank.

CONSTRUCTION

Nº	Part	Materials		
		LP-.../INOX	LP-.../PVC	LP-.../PTFE
1	Spring Assembly	EN 1.4404 (AISI 316L)	PVC	PTFE
2	Indicator housing	Aluminium	Aluminium	Aluminium
3	Spring	EN 1.4404	EN 1.4404+PVC	EN 1.4404+PTFE
4	Float magnet	Alnico	Alnico	Alnico
5	Indicator magnet	Alnico	Alnico	Alnico
6	Float guide	EN 1.4404	PVC	PTFE
7	Float	EN 1.4404	PVC	PTFE
8	Coupling piece	EN 1.4404	PVC	PTFE

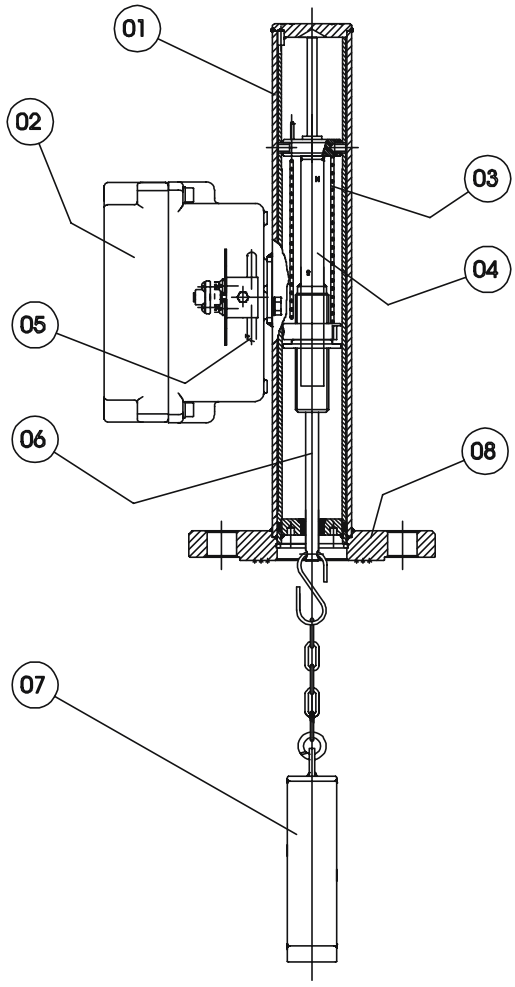

MECHANICAL MAINTENANCE

Indicating housing

If on receipt of the instrument incorrect operation is detected, check the following points. If necessary, dismount the front cover which is held by four M5 Allen screws (5) and plastic washers (6) at the rear of the indicator housing.

1. THE INDICATING NEEDLE (1) RUBS AGAINST THE SCALE PLATE (4).

This is normally due to the instrument being dropped or hit. The indicating needle should be straightened until it is separated about 2-3 mm from the scale plate surface (4).

2. THE INDICATING NEEDLE (1) IS NOT INDICATING THE ZERO OF THE SCALE.

For this the instrument should be in its normal working position. If when the float is moved upwards, the indicating needle moves but doesn't return to zero, check that the bushing (3) is well fixed to the shaft (2). If this is not so, proceed to fix the bushing (3) to the conical end of the shaft using a careful and gentle blow.

It could have moved during transport or due to a blow from the flow meter being dropped. Adjust the indicating needle to the zero of the scale using the indicating needle's adjusting screw (7), turning left or right as required. Attention, hold the shaft (2) so that it will not be bent or damaged.

Check that there is no contact between the mobile system of the needle and connecting cables for limit switches or transmitters.

In this way the level indicator will be adjusted to give correct readings.

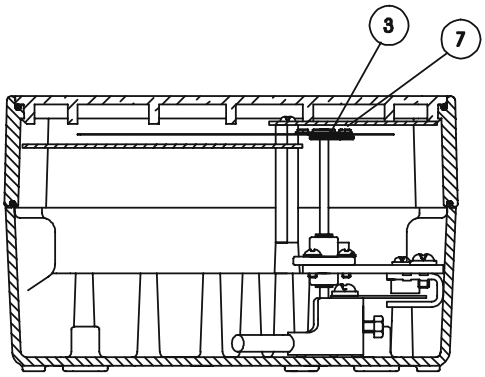

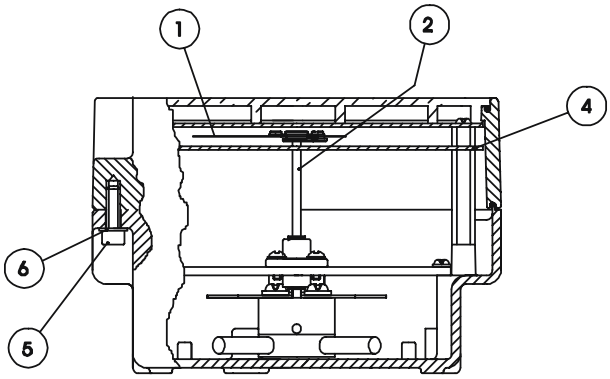

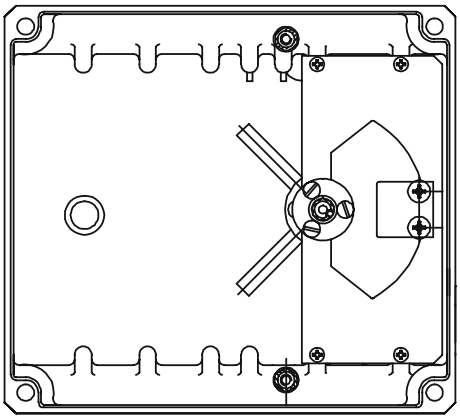

Spring assembly

In the spring assembly the following problems can occur:

- Decay of the float magnet,
- Variation of the adjustment of the spring.

In the event of either of these problems, it is preferable to repair the system at the TECFLUID factory given that the repair can modify the readings and a recalibration will normally be required.

WARRANTY

TECFLUID guarantees all the products for a period of 24 months from their sale, against all faulty materials, manufacturing or performance. This warranty does not cover failures which might be imputed to misuse, use in an application different to that specified in the order, the result of service or modification carried out by personnel not authorized by Tecfluid, wrong handling or accident.

This warranty is limited to cover the replacement or repair of the defective parts which have not damaged due to misuse, being excluded all responsibility due to any other damage or the effects of wear caused by the normal use of the devices.

Any consignment of devices for repair must observe a procedure which can be consulted in the website www.tecfluid.fr, "After-Sales" section.

All materials sent to our factory must be correctly packaged, clean and completely exempt of any liquid, grease or toxic substances.

The devices sent for repair must enclose the corresponding form, which can be filled in via website from the same "After-Sales" section.

Warranty for repaired or replaced components applies 6 months from repair or replacement date. Anyway, the warranty period will last at least until the initial supply warranty period is over.

TRANSPORTATION

All consignments from the Buyer to the Seller's installations for their credit, repair or replacement must always be done at freight cost paid unless previous agreement.

The Seller will not accept any responsibility for possible damages caused on the devices during transportation.

TECFLUID
B.P. 27709
95046 CERGY PONTOISE CEDEX - FRANCE
Tel. 00 33 1 34 64 38 00 - Fax 00 33 1 30 37 96 86
E-mail: info@tecfluid.fr
Internet: www.tecfluid.fr

The technical data in this pamphlet is subject to modification without notification, if the technical innovations in the product or manufacturing processes so require.